Printed-circuit board connector - DMCV 1,5/ 3-G1-3,5 P20THR - 1787218

Please be informed that the data shown in this PDF Document is generated from our Online Catalog. Please find the complete data in the user's documentation. Our General Terms of Use for Downloads are valid
(http://phoenixcontact.com/download)

Header, Nominal current: 8 A, Rated voltage (III/2): 160 V, Number of positions: 3, Pitch: 3.5 mm, Color: black, Contact surface: Tin, Mounting: SMD/THT/THR

The figure shows a 10-pos. version with 20 contacts

Product Features

- Plug-in direction vertical to the conductor axis
- Extremely small THR double-level headers for SMT and wave soldering processes

Key Commercial Data

Packing unit	1 pc
Minimum order quantity	50 pc
Weight per Piece (excluding packing)	1.6 g
Custom tariff number	85366990
Country of origin	Germany

Technical data

Dimensions

Length	10.6 mm
Pitch	3.50 mm
Dimension a	7 mm
Width	11.3 mm
Constructional height	12 mm
Height	14 mm
Length of the solder pin	2 mm
Pin dimensions	0,8 x 0,8 mm
Pin spacing	5.50 mm
Hole diameter	1.4 mm

Printed-circuit board connector - DMCV 1,5/ 3-G1-3,5 P20THR - 1787218

Technical data

General

Range of articles	DMCV 1,5/..-G1-THR
Insulating material group	IIIa
Rated surge voltage (III/3)	2.5 kV
Rated surge voltage (III/2)	2.5 kV
Rated surge voltage (II/2)	2.5 kV
Rated voltage (III/3)	32 V
Rated voltage (III/2)	160 V
Rated voltage (II/2)	250 V
Connection in acc. with standard	EN-VDE
Nominal current I_N	8 A
Maximum load current	8 A
Insulating material	LCP
Flammability rating according to UL 94	V0
Color	black
Number of positions	3

Standards and Regulations

Connection in acc. with standard	EN-VDE
	CUL
Flammability rating according to UL 94	V0

Classifications

eCl@ss

eCl@ss 4.0	272607xx
eCl@ss 4.1	27260701
eCl@ss 5.0	27260701
eCl@ss 5.1	27260701
eCl@ss 6.0	27260704
eCl@ss 7.0	27440402
eCl@ss 8.0	27440402

ETIM

ETIM 4.0	EC002637
ETIM 5.0	EC002637

UNSPSC

UNSPSC 6.01	30211810

Printed-circuit board connector - DMCV 1,5/ 3-G1-3,5 P20THR - 1787218

Classifications

UNSPSC

UNSPSC 7.0901	39121409
UNSPSC 11	39121409
UNSPSC 12.01	39121409
UNSPSC 13.2	39121409

Approvals

Approvals

Approvals

VDE Gutachten mit Fertigungsüberwachung / IECEE CB Scheme / cULus Recognized

Ex Approvals

Approvals submitted

Approval details

VDE Gutachten mit Fertigungsüberwachung

Nominal current IN	8 A
Nominal voltage UN	160 V

IECEE CB Scheme

Nominal current IN	8 A
Nominal voltage UN	160 V

cULus Recognized

	B	C
Nominal current IN	8 A	8 A

Printed-circuit board connector - DMCV 1,5/ 3-G1-3,5 P20THR - 1787218

Approvals

	B	C
Nominal voltage UN	150 V	50 V

Drawings

Diagram

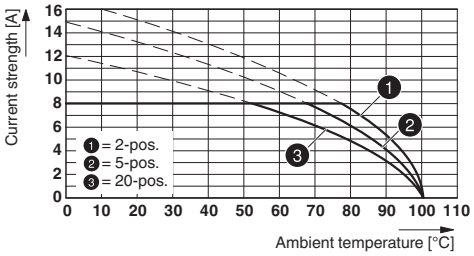

Typ: DFMC 1,5/..-ST-3,5 with DMCV 1,5/..-G1-3,5 P20 THR

Schematic diagram

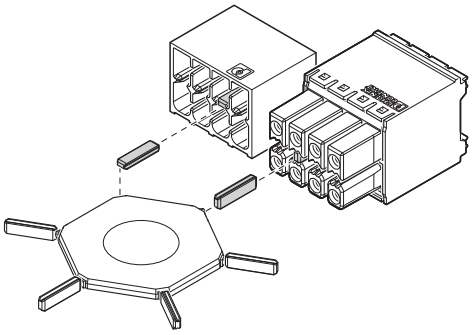

Use of the CP-DMC... coding profile

Drilling diagram

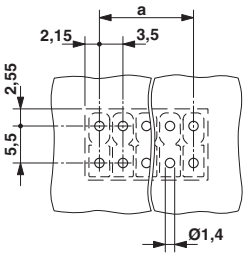

Dimensional drawing

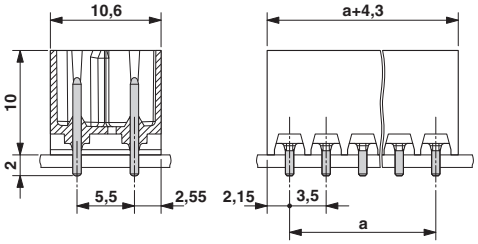

Phoenix Contact 2016 © - all rights reserved
http://www.phoenixcontact.com