# Printed-circuit board connector - DMCV 1,5/ 5-G1-3,5 P20THR - 1787234

Please be informed that the data shown in this PDF Document is generated from our Online Catalog. Please find the complete data in the user's documentation. Our General Terms of Use for Downloads are valid
(http://phoenixcontact.com/download)

Header, Nominal current: 8 A, Rated voltage (III/2): 160 V, Number of positions: 5, Pitch: 3.5 mm, Color: black, Contact surface: Tin, Mounting: SMD/THT/THR

The figure shows a 10-pos. version with 20 contacts

## Product Features

- Plug-in direction vertical to the conductor axis
- Extremely small THR double-level headers for SMT and wave soldering processes

## Key Commercial Data

| | |
|---|---|
| Packing unit | 1 pc |
| Minimum order quantity | 50 pc |
| Weight per Piece (excluding packing) | 2.0 g |
| Custom tariff number | 85366990 |
| Country of origin | Germany |

## Technical data

### Dimensions

| | |
|---|---|
| Length | 10.6 mm |
| Pitch | 3.50 mm |
| Dimension a | 14 mm |
| Width | 18.3 mm |
| Constructional height | 12 mm |
| Height | 14 mm |
| Length of the solder pin | 2 mm |
| Pin dimensions | 0,8 x 0,8 mm |
| Pin spacing | 5.50 mm |
| Hole diameter | 1.4 mm |

# Printed-circuit board connector - DMCV 1,5/ 5-G1-3,5 P20THR - 1787234

## Technical data

### General

| | |
|---|---|
| Range of articles | DMCV 1,5/..-G1-THR |
| Insulating material group | IIIa |
| Rated surge voltage (III/3) | 2.5 kV |
| Rated surge voltage (III/2) | 2.5 kV |
| Rated surge voltage (II/2) | 2.5 kV |
| Rated voltage (III/3) | 160 V |
| Rated voltage (III/2) | 160 V |
| Rated voltage (II/2) | 250 V |
| Connection in acc. with standard | EN-VDE |
| Nominal current $I_N$ | 8 A |
| Maximum load current | 8 A |
| Insulating material | LCP |
| Flammability rating according to UL 94 | V0 |
| Color | black |
| Number of positions | 5 |

### Standards and Regulations

| | |
|---|---|
| Connection in acc. with standard | EN-VDE |
| | CUL |
| Flammability rating according to UL 94 | V0 |

## Classifications

### eCl@ss

| | |
|---|---|
| eCl@ss 4.0 | 272607xx |
| eCl@ss 4.1 | 27260701 |
| eCl@ss 5.0 | 27260701 |
| eCl@ss 5.1 | 27260701 |
| eCl@ss 6.0 | 27260704 |
| eCl@ss 7.0 | 27440402 |
| eCl@ss 8.0 | 27440402 |

### ETIM

| | |
|---|---|
| ETIM 4.0 | EC002637 |
| ETIM 5.0 | EC002637 |

### UNSPSC

| | |
|---|---|
| UNSPSC 6.01 | 30211810 |

# Printed-circuit board connector - DMCV 1,5/ 5-G1-3,5 P20THR - 1787234

## Classifications

### UNSPSC

| | |
|---|---|
| UNSPSC 7.0901 | 39121409 |
| UNSPSC 11 | 39121409 |
| UNSPSC 12.01 | 39121409 |
| UNSPSC 13.2 | 39121409 |

## Approvals

### Approvals

Approvals

VDE Gutachten mit Fertigungsüberwachung / IECEE CB Scheme / cULus Recognized

Ex Approvals

Approvals submitted

### Approval details

VDE Gutachten mit Fertigungsüberwachung

| | |
|---|---|
| Nominal current IN | 8 A |
| Nominal voltage UN | 160 V |

IECEE CB Scheme

| | |
|---|---|
| Nominal current IN | 8 A |
| Nominal voltage UN | 160 V |

cULus Recognized

| | B | C |
|---|---|---|
| Nominal current IN | 8 A | 8 A |

# Printed-circuit board connector - DMCV 1,5/ 5-G1-3,5 P20THR - 1787234

## Approvals

| | B | C |
|---|---|---|
| Nominal voltage UN | 150 V | 50 V |

## Drawings

Diagram

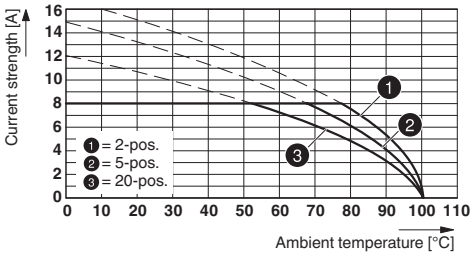


Typ: DFMC 1,5/..-ST-3,5 with DMCV 1,5/..-G1-3,5 P20 THR

Schematic diagram

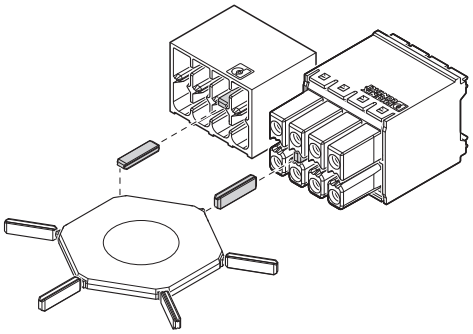

Use of the CP-DMC... coding profile

Drilling diagram

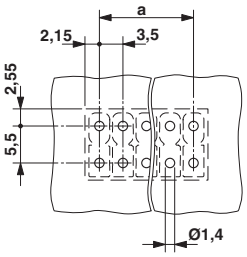


Dimensional drawing

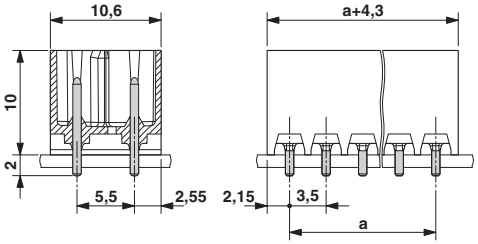


Phoenix Contact 2016 © - all rights reserved
http://www.phoenixcontact.com